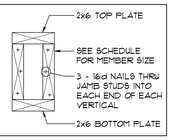

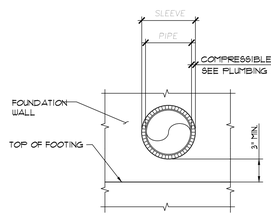

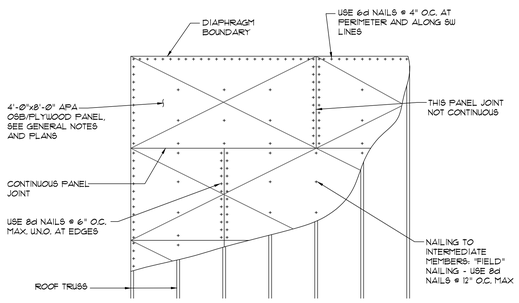

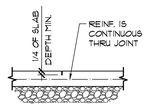

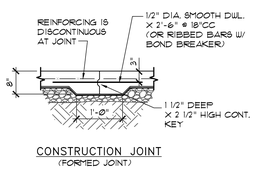

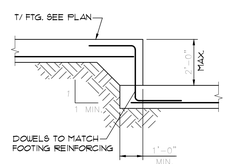

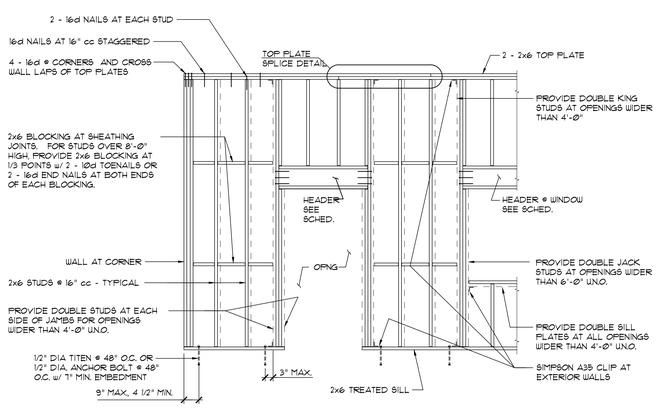

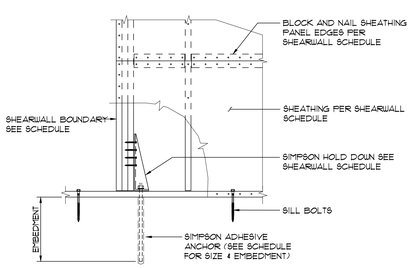

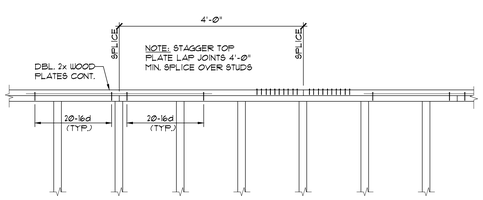

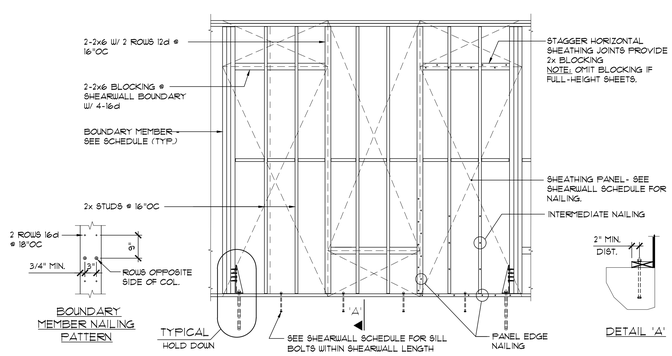

GENERAL NOTES

1. THE STRUCTURAL DOCUMENT (DRAWINGS & SPECIFICATIONS) - MUST NOT BE USED WITHOUT THE CONSTRUCTION DOCUMENT OF OTHER DISCIPLINES. COORDINATION BETWEEN STRUCTURAL DOCUMENT AND OTHER DISCIPLINE'S DOCUMENT IS THE RESPONSIBILITY OF THE GENERAL CONTRACTOR AND THE SUBCONTRACTOR RESPONSIBLE FOR THE WORK.
2. EXISTING CONDITIONS SHOWN ON THE STRUCTURAL DOCUMENT ARE CONCEPTUAL & MUST BE VERIFIED IN THE FIELD BY GENERAL CONTRACTOR PRIOR TO DETAILING, FABRICATION, & CONSTRUCTION OF RELATED WORK.
3. ALL ITEMS REQUIRED BY OTHER DISCIPLINE'S WORK & IMPACTING THE STRUCTURAL WORK SUCH AS CASTING OF ANCHORS, SLEEVES, CONDUITS, OPENINGS, SUPPORTS FOR & BRACING FOR NON-STRUCTURAL COMPONENT SHALL BE IDENTIFIED BY SUBCONTRACTORS RESPONSIBLE FOR SUCH WORK & SUBMITTED WITH DETAILS FOR STRUCTURAL ENGINEER'S APPROVAL.
4. THE SEOR IS NOT RESPONSIBLE FOR MEANS, METHODS, AND SEQUENCE OF WORK. ALL TEMPORARY BRACING, SHORING, COMPLIANCE WITH OSHA REGULATIONS & SOILS REPORT AND GENERAL STABILITY OF INDIVIDUAL STRUCTURAL COMPONENT DURING CONSTRUCTION IS THE RESPONSIBILITY OF THE GENERAL CONTRACTOR.
5. WHERE SPECIFIC DETAILS ARE NOT IDENTIFIED ON THE STRUCTURAL PLANS, REFER TO TYPICAL DETAILS AND UTILIZE INDUSTRY STANDARD PRACTICE AS IDENTIFIED IN SPECIFIED CODES, REGULATIONS, AND STANDARDS.

DESIGN CRITERIA
BUILDING CODE: IBC 2009 / ASCE 7-05

LIVE LOADS
ROOF 0 TO 200 S.F.: 20 PSF
200 TO 600 S.F.: 24 - 0.02 AREA BUT NOT LESS THAN 12 PSF
OVER 600 S.F.: 12 PSF

DEAD LOADS
ROOF 15 PSF

ROOF SNOW LOADS

DESIGN ROOF SNOW LOAD	25.0 PSF
FLAT ROOF SNOW LOAD, Pf	20 PSF
SNOW EXPOSURE FACTOR, Ce	1.00
IMPORTANCE FACTOR, i	1.00
THERMAL FACTOR, Ct	1.00
GROUND SNOW LOAD, Pg	20 PSF
RAIN ON SNOW SURCHARGE	~~5 PSF~~
SLOPED ROOF FACTOR, Cs	1.00

WIND DESIGN DATA

BASIC WIND SPEED	90 MPH
MEAN ROOF HT (h)	27 FEET
BUILDING CATEGORY	II
IMPORTANCE FACTOR	1.00
EXPOSURE CATEGORY	B
ENCLOSURE CLASSIF.	ENCLOSED BUILDING
INTERNAL PRESSURE COEF.	+/- 0.18
DIRECTIONALITY (Kd)	0.85

EARTHQUAKE DESIGN DATA

OCCUPANCY CATEGORY	II
IMPORTANCE FACTOR, I	1.00
MAPPED SPECTRAL RESPONSE, Ss	.54
ACCELERATIONS, S1	.18
SITE CLASS	C
SPECTRAL RESPONSE COEF., Sds	0.434
Sd1	0.192
SEISMIC DESIGN CATEGORY	C
BASIC STRUCTURAL SYSTEM	BEARING WALL
SEISMIC RESISTING SYSTEM	LIGHT FRAME WALLS w/SHEAR PANELS ~~WOOD STRUCTURAL PANELS/SHEET STEEL PANELS~~
DESIGN BASE SHEAR, V	0.0677W
SEISMIC RESPONSE COEF., Cs	0.0677
RESPONSE MODIFICATION FACTOR, R	6.5
ANALYSIS PROCEDURE	EQUIVALENT LATERAL-FORCE ANALYSIS

CONCRETE
1. DETAILING, FABRICATION AND REINFORCING STEEL -- PER LATEST CRSI MANUAL OF STANDARD PRACTICE.
2. REINFORCING STEEL -- ASTM A615, GRADE 60.
3. MINIMUM 28 DAY CONCRETE STRENGTH -- 4000 PSI, UNLESS NOTED OTHERWISE.
4. LAP FOR CONTINUOUS REINFORCING BARS -- 60 DIAMETERS, BUT NOT LESS THAN 2'-0" LAP BOTTOM REINFORCING AT SUPPORT.
5. MINIMUM CONCRETE COVER FOR REINFORCING BARS:
   SLABS (EXCEPT SLABS ON GRADE) . . . 1"
   BEAMS AND COLUMNS . . . . 1 1/2" TO TIES OR STIRRUPS
   WALLS . . . . 1 1/2" EXTERIOR FACE, 1" INTERIOR FACE
   CONCRETE CAST AGAINST EARTH . . . . . 3"
6. BLOCKING, SLEEVES, BOLTS, AND ANCHORS REQUIRED TO BE SET IN CONCRETE OR TO BE ATTACHED TO STEEL -- PER ARCHITECTURAL AND MECHANICAL DRAWINGS.

FOUNDATION
1. SOIL BEARING PRESSURE --- 2000 PSF. REF. JACOBI GEOTECHNICAL REPORT NO. JGE 19119.1, DATED JULY 17, 2019.

SITEWORK
1. BACKFILL SHALL BE FREE OF DEBRIS AND LARGE ROCKS.
2. SLOPE GRADE AWAY FROM BUILDING AT 1 INCH PER FOOT MINIMUM FOR A DISTANCE OF 8'-0" MINIMUM OR TO SWALE. ADDITIONAL VERTICAL UNITS MAY BE REQUIRED TO ACCOUNT FOR SETTLEMENT OF BACKFILL AT THE IMMEDIATE PERIMETER OF THE FOUNDATION.
3. PROVIDE CONCRETE SPLASH BLOCKS AT ALL DOWNSPOUTS. DOWNSPOUTS DISCHARGE SHALL BE DIRECTED AWAY FROM THE FOUNDATION.
4. FINISHED GRADES AT BUILDING TO BE A MINIMUM OF 8" BELOW TOP OF FOUNDATION FOR WOOD FRAME WALLS AND 6" MINIMUM BELOW FOR FULL MASONRY WALLS.
5. SILTATION AND EROSION CONTROL MEASURES MUST BE PROVIDED TO PREVENT SILTATION/EROSION FROM LEAVING THE CONSTRUCTION SITE.

WOOD FRAMING (ROUGH CARPENTRY, WOOD RPODUCTS AND WOOD TRUSSES)

A. DESIGN CODES:
   1. NATIONAL DESIGN SPECIFICATION FOR WOOD CONSTRUCTION (NDS), LATEST ADOPTION.
   2. INSTALL ROUGH CARPENTRY WORK TO COMPLY WITH AMERICAN INSTITUTE OF TIMBER CONSTRUCTION (AITC) TIMBER CONSTRUCTION (TC) MANUAL, LATEST ADOPTION AND RECOMMENDATIONS OF THE PRODUCT MAUFACTURER.
B. MATERIAL STRENGTHS:
   1. ALL WOOD STICK FRAMING SHALL BE SOUTHERN YELLOW PINE, NO. 1 GRADE (GRADED UNDER WWPA RULES) OR BETTER.
   2. LUMBER FOR MISCELLANEOUS USES MAY BE "STANDARD" GRADE LIGHT-FRAMING-SIZE LUMBER OF ANY SPECIES FOR SUPPORT OF OTHER CONSTRUCTION INCLUDING ROOFTOP EQUIPMENT AND SUPPORT BASES, CANT STRIPS, BUCKS, NAILERS, BLOCKING, FURRING, GROUND, STRIPPING AND SIMILAR MEMBERS.
   3. ULTRA LAM COLUMNS AS MANUFACTURED BY VALLEY LUMBER CO. INC.
   4. FASTENERS:
      a. NAILS, WIRE BRADS AND STAPLES: ASTM F547
      b. POWER DRIVEN FASTENERS: NATIONAL EVALUATION REPORT NER-272
      c. WOOD SCREWS: ANSI B18.6.1
      d. LAG BOLTS: ANSI B18.2.1
      e. BOLTS: ASTM A307, GRADE A OR ASTM A36
C. WOOD TRUSS MEMBERS:
   1. TRUSSES SHOWN ON PLANS ARE FOR CONFIGURATION ONLY. CONTRACTOR SHALL SUBMIT SHOP DRAWINGS WITH MISSOURI PROFESSIONAL ENGINEERS SEAL SHOWING ACTUAL MEMBER STRESSES AND JOINT PLATE SIZES CONFORMING TO LOADING FIGURES CONSTRUCTED BY THE TRUSS SUPPLIER. TRUSS LAYOUT/PLAN DRAWINGS SHALL BE SUBMITTED.
   2. ALL WOOD TRUSS TO WOOD TRUSS (OR WOOD GIRDER TRUSS) CONNECTIONS SHALL BE BY WOOD TRUSS SUPPLIER. SHOP DRAWINGS SHALL BE SUBMITTED FOR THESES CONNECTIONS, TYPICAL.
   3. TEMPORARY AND PERMANENT WOOD TRUSS BRACING/BRIDGING LOCATION AND SIZE SHALL BE DESIGNED AND INDICATED BY THE TRUSS MANUFACTURER, TYP.
   4. LIVE LOAD DEFLECTION DESIGN LIMITS SHALL NOT BE GREATER THAN THE FOLLOWING:
      a. ROOF TRUSSES, VERTICAL 1/360 TIMES PROJECTED SPAN.
      b. FLOOR TRUSSES, VERTICAL 1/480 TIMES SPAN LENGTH.
   5. PROVIDE 1/8" OF CAMBER FOR EACH 6'-0" OF TRUSS SPAN UNO.
D. NOTES:
   1. ALL BEAMS, HEADERS, LINTELS AND COLUMNS SHALL BE CONNECTED WITH APPROPRIATE METAL STANDARDS OF SIMPSON STRONG-TIE. ATTACH ANCHORS TO WOOD FRAMING IN ACCORDANCE WITH MANUFACTURERS RECOMMENDATIONS.
   2. MISCELLANEOUS FASTENER CONNECTIONS SHALL BE IN ACCORDANCE WITH THE NAILING SCHEDULE OF THE APPROPRIATE BUILDING CODE. WHERE ROUGH CARPENTRY IS EXPOSED TO WEATHER, IN GROUND CONTACT, OR IN AREAS OF HIGH RELATIVE HUMIDITY, PROVIDE HOT-DIP-ZINC COATED FASTENERS PER ASTM A153 OR AISI TYPE 304 STAINLESS STEEL FASTENERS.
   3. ALL MULTIPLE-PLY MICROLAM MEMBERS SHALL BE INTERCONNECTED PER MANUFACTURER INSTRUCTIONS FOR SIDE-LOADED BEAMS.
   4. PRESERVATIVE PRESSURE TREAT LUMBER AND PLYWOOD WITH WATER-BORNE PRESERVATIVES TO COMPLY WITH AWPA C2 AND C9 RESPECTIVELY, AND WITH REQUIREMENTS INDICATED BELOW.
      a. PRESSURE TREAT ABOVE-GROUND ITEMS WITH WATER-BORNE PRESERVATIVE TO A MINIMUM RETENTION OF 0.25 PCF, FOR INTERIOR USES, AFTER TREATMENT, KILN-DRY LUMBER AND PLYWOOD TO A MAXIMUM MOISTURE CONTENT, RESPECTIVELY, OF 18 PERCENT AND 15 PERCENT, TREAT INDICATED ITEMS AND THE FOLLOWING:
         1. WOOD CANTS, NAILERS, CURBS, EQUIPMENT, SUPPORT BASES, BLOCKING STRIPPING AND SIMILAR MEMBERS IN CONNECTION WITH ROOFING, FLASHING, VAPOR BARRIERS AND WATERPROOFING.
         2. WOOD SILLS, SLEEPERS, BLOCKING, FURRING, STRIPPING AND SIMILAR CONCEALED MEMBERS IN CONTACT WITH MASINRY OR CONCRETE.
      b. COMPLETE FABRICATION OF TREATED ITEMS PRIOR TO TREATMENT, WHERE POSSIBLE. IF CUT AFTER TREATMENT, COAT CUT SURFACES TO COMPLY WITH AWPA M4. INSPECT EACH PIECE OF LUMBER OR PLYWOOD AFTER FRYING AND DISCARD DAMAGED OR DEFECTIVE PIECES.

CONCRETE:

1. CONCRETE SHALL CONFORM WITH THE REQUIREMENTS SET FORTH IN A.C.I. 301 AND SHALL HAVE A 28-DAY COMPRESSIVE STRENGTH AND DENSITY, IN ACCORDANCE WITH THE FOLLOWING:

INTENDED USE	28-DAY STRENGTH Fc (KSI)	CONCRETE DENSITY	MAX. W/C (INCLUDING FLY ASH)	MIN. CEMENT MATL. (#/CY INCLUDING FLY ASH)	MAXIMUM AGGREGATE (IN)	SLUMP LIMITS (IN)(+0"-2")	TOTAL AIR LIMITS (%0) (B)	REQUIRED ADMIXTURES (C)
DRILLED PIERS	4	145	0.48	564	1	7	6	AE
FOOTINGS	4	145	0.48	564	1	4	-	-
GRADE BEAMS, TIE BEAMS AND BASEMENT WALLS	4	145	0.48	564	3/4	4	-	-
COLUMNS	5	145	0.48	611	3/4	4	-	-
STRUCTURAL SLABS AND BEAMS	4	145	0.48	564	3/4	4	N	-
CONCRETE EXPOSED TO DEICERS	4	145	0.40	564	3/4	4	6	AE, WR
SLABS ON METAL DECK	3.5	110	0.50	541	3/4	5	-	-
INTERIOR TOPPING SLABS	3.5	145	0.50	541	3/4	4	-	-
INTERIOR SLAB ON GRADE	4	145	0.50	564	1	4	N	-
ALL CONCRETE NOT OTHERWISE SPECIFIED	4	145	0.40	564	3/4	4	6	-

A. FOR MAXIMUM COARSE AGGREGATE SIZE INDICATED, USE THE FOLLOWING AGGREGATE SIZE NUMBERS PER A.S.T.M.
   C33: 3/8" - #8 AGGREGATE
   ¾" - #67 AGGREGATE
   1" - #57 AGGREGATE
   1 ½" - #467 AGGREGATE
B. TOTAL AIR CONTENT LIMITS INCLUDE BOTH ENTRAINED AND ENTRAPPED AIR +/- 1 ½%. "N" IN COLUMN INDICATES ADDITION OF ENTRAINED AIR NOT PERMITTED.
C. ABBREVIATIONS FOR REQUIRED ADMIXTURES AS FOLLOWS:
   AE – AIR-ENTRAINED ADMIXTURE
   WR – WATER REDUCING ADMIXTURE
D. MAXIMUM SHRINKAGE FOR SLAB ON GRADE SHALL BE LIMITED TO ¼" PER 100 FOOT.

2. REINFORCING SHALL CONFORM TO A.S.T.M. A615, GR. 60, INCLUDING TIES AND STIRRUPS. BARS REQUIRING WELDING OR FIELD BENDING SHALL BE A.S.T.M. A706, GRADE 60.
3. WELDED WIRE FABRIC SHALL CONFORM TO A.S.T.M. A185.
4. LAP SPLICES SHALL BE IN ACCORDANCE WITH THE FOLLOWING TABLE, UNLESS NOTED OTHERWISE. WHERE CLASSES ARE NOT CALLED OUT ON DRAWING, USE CLASS "B" SPLICES.
   SPLICES f'c = 4000 P.S.I., Fy = 60,000 P.S.I.

STANDARD TENSION LAP SPLICE, GRADE 60
CLASS A, AB, LAP SPLICE LENGTH (INCHES)

		f'c = 3,000 P.S.I.				f'c = 4,000 P.S.I.				f'c = 5,000 P.S.I			
BAR SIZE	CLASS	A		B		A		B		A		B	
	CASE	1	2	1	2	1	2	1	2	1	2	1	2
#3	.	16	16	16	16	16	16	16	16	16	16	16	16
#4	.	16	16	16	16	16	16	16	16	16	16	16	16
#5	.	16	16	16	16	16	16	16	16	16	16	16	16
#6	.	16	16	16	16	16	16	16	16	16	16	16	16
#7	.	16	16	16	16	16	16	16	16	16	16	16	16
#8	.	16	16	16	16	16	16	16	16	16	16	16	16
#9	.	16	16	16	16	16	16	16	16	16	16	16	16
#10	.	16	16	16	16	16	16	16	16	16	16	16	16
#11	.	16	16	16	16	16	16	16	16	16	16	16	16

"TOP BARS" ARE DEFINED AS ANY BAR WITH MORE THAN 12" OF CONCRETE CAST BELOW THE BAR, SEE NOTE 4 IN TABLE NOTES

COMPRESSION LAP SCHEDULE
LAP LENGTH (INCHES)
f'c = 3,000 P.S.I. OR GREATER

BAR SIZE	MIN. LAP
#3	12
#4	15
#5	19
#6	22
#7	26
#8	29
#9	33
#10	37
#11	41

TABLE NOTES
1. TABLES ARE BASED A.C.I. 318. WHERE CLEAR SPACING OF BARS BEING DEVELOPED OR SPLICED IS AT LEAST 2 BAR DIAMETERS AND THE CLEAR COVER AT LEAST 1 BAR DIAMETER, USE CASE 1. USE CASE 2 FOR OTHER BAR ARRANGEMENTS.
2. ALL SPLICES TO BE CLASS "B" TENSION SPLICE UNLESS OTHERWISE NOTED.
3. SPLICE PLAIN WIRE FABRIC BY LAPPING ONE FULL MESH SPACE PLUS 2 INCHES.
4. FOR TOP BARS, MULTIPLY LENGTHS IN TABLE BY 1.3.
5. FOR EPOXY COATED REINFORCEMENT, MULTIPLY LENGTHS IN TABLE BY 1.3 FOR TOP BARS AND 1.5 FOR COVER LESS THAN 3db OR CLEAR LESS THAN 6db, MULTIPLY LENGTHS IN TABLE BY 1.2 FOR ALL OTHER EPOXY COATED REINFORCEMENT.
6. FOR LIGHT CONCRETE, MULTIPLY LENGTHS IN TABLE BY 1.3.
7. COMPRESSION DOWEL EMBEDMENT: 22 BAR DIAMETERS.

STRUCTURAL STEEL:

1. STEEL SHALL CONFORM TO THE FOLLOWING GRADES:
   ALL WIDE FLANGE (U.N.O.), A992 GRADE 50 (FY=50)
   ALL CHANNEL, ANGLE, BASE PLATES, CONNECTION PLATES (U.N.O.), A36 (FY=36)
   STRUCTURAL PIPE: A53 (FY=35)
   STRUCTURAL HSS RECTANGULAR TUBE: A500 GRADE B (FY=46)
   STRUCTURAL HSS ROUND TUBE: A500 GRADE B (FY=42)
2. ALL STRUCTURAL STEEL SHALL BE DETAILED, FABRICATED AND ERECTED IN ACCORDANCE WITH THE A.S.C.I. CODE OF STANDARD PRACTICE (1992), EXCEPT AS MODIFIED IN THESE NOTES AND THE PROJECT SPECIFICATIONS.
3. CONNECTIONS MAY BE BOLTED OR WELDED. THE FABRICATOR IS RESPONSIBLE FOR THE DESIGN OF CONNECTIONS NOT DESIGNED ON THE DRAWINGS. GENERALLY, CONNECTIONS SHOWN ON THE STRUCTURAL DRAWINGS ARE SCHEMATIC AND ARE ONLY INTENDED TO SHOW THE RELATIONSHIP OF MEMBERS CONNECTED. ANY CONNECTION THAT IS SHOWN OR IS NOT COMPLETELY DETAILED ON THE STRUCTURAL DRAWINGS SHALL BE DESIGNED BY A PROFESSIONAL ENGINEER, REGISTERED IN THE STATE OF THE PROJECT, RETAINED BY THE FABRICATOR. COMPLETELY DETAILED MEANS THE FOLLOWING INFORMATION IS SHOWN ON THE DETAIL:
   A. ALL PLATE DIMENSIONS AND GRADES.
   B. ALL WELD SIZES, LENGTHS, PITCHES, AND RETURNS.
   C. ALL HOLE SIZES AND SPACINGS.
   D. NUMBER AND TYPES OF BOLTS: WHERE BOLTS ARE SHOWN BUT NO NUMBER IS GIVEN, THE CONNECTION HAS NOT BEEN COMPLETELY DETAILED.
   E. WHERE PARTIAL INFORMATION IS GIVEN, IT SHALL BE THE MINIMUM REQUIREMENT FOR THE CONNECTION.

   PRIOR TO FABRICATION, PROVIDE (FOR RECORD COPY) DESIGN CALCULATIONS FOR TYPICAL BEAM CONNECTIONS, ALL PRIMARY BRACING AND HANGER CONNECTIONS, SIGNED AND SEALED BY A PREOFESSIONAL ENGINEER REGISTERED IN THE STATE OF THE PROJECT SHALL BE SUBMITTED TO THE ENGINEER.

   CONNECTION DESIGN FORCES:

   A. BEAMS, GREATER OF:
      55% OF TOTAL ALLOWABLE UNIFORM LOAD CAPACITY FROM A.I.S.C. 9TH EDITION TABLES FOR ALLOWABLE LOADS ON BEAMS, Wc/L.
      REACTIONS SHOWN ON DRAWINGS.
      10 KIPS.
   B. MOMENT CONNECTIONS INDICATED ON THE DRAWINGS THUS: {-< }-{ >-} DEISGN FOR MOMENT SHOWN OR, IF NOT SHOWN, DEVELOP MOMENT CAPACITY OF MEMBER WITH fb=0.66 FY.
   C. MAINTAIN TENSION INDICATED OF COLUMNS, DIAGONALS AND MEMBERS SUBJECT TO TENSION AT BOLT HOLES, NOTCHES, OR COPES.
   D. CONNECTION FORCE NOTATION:
      P = AXIAL FORCE IN KIPS: (+) TENSION, (-) COMPRESSION
      V OR [ ] = SHEAR IN KIPS
      M = MOMENT IN FOOT KIPS
      T = TORSION IN FOOT KIPS
   E. LOADS SHOWN INCLUDE COMPENSATION FOR CODE PERMITTED LOAD REDUCTIONS FOR CONNECTION DESIGN.
5. THE MINIMUM PLATE THICKNESS SHALL BE 3/8".
6. BOLTED CONNECTIONS:
   A. MINIMUM BOLT DIAMETER = ¾"
   B. SLIP CRITICAL CONNECTIONS OF A3255C OR A490SC BOLTS SHALL BE USED FOR ALL BOLTED CONNECTIONS OF BRACING MEMBERS, MOMENT CONNECTIONS, CANTILEVERS, AND AS SHOWN ON THE DRAWINGS. OVERSIZED AND LONG-SLOTTED HOLES ARE ALLOWED FOR SLIP CRITICAL CONNECTIONS.
   C. ALL OTHER BOLTED CONNECTIONS SHALL BE BEARING TYPE USING A325N OR A490N BOLTS. OVERSIZED HOLES AND LONG-SLOTTED HOLES ARE NOT ALLOWED UNLESS SHOWN ON THE DRAWINGS.
   D. A307 BOLTS MAY BE USED WHERE INDICATED ON THE DRAWINGS.
   E. PROTRUDING BOLT HEADS, SHAFTS OR NUTS SHALL NOT EXTEND INTO NOR PROHIBIT THE APPLICATION OF ARCHITECTURAL FINISHED AND THEY SHALL NOT EXTEND INTO NOT PROHIBIT THE PLACEMENT OF STEEL DECKING TO THE CORRECT LINE AND ELEVATION.
   F. THE FABRICATOR IS RESPONSIBLE FOR VERFYING THE TENSION CAPACITY OF AXIALLY LOADED MEMBERS AFTER A SECTION IS REDUCED FOR BOLT HEADS. MEMBER SIZE MAY BE INCREASED OR CONNECTION PLATES ADDED AS REQUIRED.
   G. SHOP DRAWINGS SHALL INDICATE THE TYPE OF BOLT USED IN EACH CONNECTION AND THE ALLOWABLE VALUES USED FOR THE VARIOUS BOLT TYPES.
7. WELDED CONNECTIONS:
   A. WELDS ARE CONTINUOUS UNLESS NOTED.
   B. ALL FILLET WELDS: A.I.S.C. MINIMUM BUT NOT LESS THAN 1.4" UNLESS NOTED OTHERWISE.
   C. ALL WELDING SHALL BE IN ACCORDANCE WITH THE CURRENT "STRUCTURAL WELDING CODE" (A.W.S. DI.1) PUBLISHED BY THE AMERICAN WELDING SOCIETY. ELECTRODES FOR WELDING SHALL COMPLY WITH THE REQUIREMENTS OF TABLE 4.1.1 OF (A.W.S. DI.1).
   D. ALL GROOVE WELDS SHALL BE COMPLETE PENETRATION UNLESS NOTED OTHERWISE.
8. SPLICING OF STEEL MEMBERS, UNLESS SHOWN ON THE DRAWINGS, IS PROHIBITED WITHOUT WRITTEN APPROVAL OF THE ARCHITECT.
9. NO CHANGES IN SIZE OR POSITION OF THE STRUCTURAL ELEMENTS SHALL BE ADE AND HOLES, SLOTS, CUTS, ETC., ARE NOT PERMITTED THROUGH ANY MEMBER UNLESS THEY ARE DETAILED ON THE APPROVED SHOP DRAWINGS.
10. NO FINAL BOLTING OR WELDING SHALL BE MADE UNTIL AS MUCH OF THE STRUCTURE AS WILL BE STIFFENED THEREBY HAS BEEN PROPERLY ALIGNED.
11. UNLESS NOTED OTHERWISE, BEAMS SHALL BEAR 8" MINIMUM ON CONCRETE OR MASONRY. ANCHOR BEAMS TO MASONRY OR CONCRETE WITH 2-3/4" DIA. ANCHOR BOLTS OR WELDED TO EMBED PLATE.
12. FABRICATE ALL BEAMS WITH THE MILL CAMBER UP.
13. SHEAR STUDS: CONFORM TO A.W.S. DI-1-98, SHOP WELD EXCEPT WHERE APPLIED THROUGH METAL DECK.
14. HEADED STUDS SHALL CONFORM TO A.W.S. DI-1-98, SHOP WELD EXCEPT WHERE APPLIED THROUGH METAL DECK. HEADED STUDS SHALL CONFORM TO A.S.T.M. A108, GRADE 1015, WELDABLE (Fy = 65 K.S.I.).
15. WHERE FIREPROOFING IS REQUIRED, ADJUST FIREPROOFING THICKNESS BASED ON MEMER SIZES. SEE ARCHITECTURAL DRAWINGS FOR FIREPROOFING REQUIREMENTS AND THICKNESS.
16. THE FABRICATOR IS RESPONSIBLE FOR THE DESIGN AND DETAILING OF STEEL STAIRS. STAIRS SHOWN ON THE STRUCTURAL DRAWINGS ARE SCHMETIS AND ARE ONLY INTENDED TO SHOW THE RELATIONSHIP OF MEMBERS CONNECTED. STAIRS SHALL BE DESIGNED BY A PROFESSIONAL ENGINEER REGISTERED IN THE STATE OF THE PROJECT, RETAINED BY THE FABRICATOR.

DRAWING INDEX

S1.0	GENERAL NOTES AND TYPICAL DETAILS
S2.0	FOUNDATION AND SLAB PLAN
S2.1	ROOF FRAMING PLAN
S3.0	FOUNDATION SECTIONS AND DETAILS
S3.1	FRAMING SECTIONS

WOOD HEADER SCHEDULE

MARK	LENGTH	HEADER	SUPPORT FRAMING JACK STUDS	SUPPORT FRAMING KING STUDS	REMARKS
H1	SEE ARCH	2-2x8	1	1	
H2	SEE ARCH	2-2x10	1	2	
H3	SEE ARCH	2-1 3/4x9 1/4	1	2	LVL E=2.0
H4	SEE ARCH	2-1 3/4x14	2	3	LVL E=2.0

WOOD COLUMN SCHEDULE

MARK	COL. SIZE	REMARKS
C1	3 - 2x6	
C2	4 - 2x6	
C3	6x6 SIMPSON MPB66Z	
C4	6x6 SIMPSON ABA66Z	

STUD WALL SCHEDULE
LOAD BEARING WALLS

HEIGHT	SIZE	SPECIES
10'-0"	2x6	SPF #1/#2
10'-0"	2x4	#1 SYP

SHEAR WALL SCHEDULE

SHEAR WALL #	SHEATHING	FASTENER	SPACING	SILL BOLT	HOLDDOWN	ANCHOR ROD SIZE	MINIMUM EMBEDMENT	REMARKS
SW-1	7/16	#8	6	1/2" @ 32"oc	HDU4	5/8" DIA.	10"	
SW-2	7/16	#8	4	1/2" @ 16"oc	HDU4	5/8" DIA.	10"	
SW-3	7/16	#8	3	5/8" @ 12"oc	HDU8	7/8" DIA.	12"	PROVIDE 3x3 WASHERS

NOTES:
1. EPOXY: SIMPSON SET-XP OR APPROVED EQUAL.
2. TITEN SILL BOLTS: 3/8" DIA. x 3", 1/2" DIA. x 4", 5/8" DIA. x 6".
3. ALL SHEATHING SHALL BE 7/16 APA RATED SHEATHING.

TYPICAL FOUNDATION WALL PIPE SLEEVE DETAIL

TYPICAL ROOF NAILING PATTERN

TYPICAL HOLDOWN

TYPICAL BEARING WALL TOP PLATE SPLICE

CONTROL JOINT
(SAWN JOINT)

CONSTRUCTION JOINT
(FORMED JOINT)

SLAB ON GRADE JOINT PATTERN

C.J. TO BE 15'-0" O.C. MAXIMUM

TYPICAL FOOTING STEP

TYPICAL WALL FRAMING

SEE GENERAL NOTES FOR WOOD FRAMING ON SHEET S1.0.

BOUNDARY MEMBER NAILING PATTERN

TYPICAL HOLD DOWN

DETAIL 'A'

TYPICAL PLYWOOD BEARING / SHEAR WALL

ROMACKER
022857
/20

The Professional Engineer's seal affixed to this sheet indicates that the named Engineer has prepared or directed the preparation of the material shown only on this sheet. Other drawings and documents not exhibiting this seal shall not be considered prepared by or the responsibility of the undersigned.

ARCHITECT:
ZWICK + GANDT
ARCHITECTURE, INC
info@zgarch-stl.com
ph: 314-962-9292

CIVIL:
VONARX ENGINEERING
dvonarx@vonarxengineering.com
ph: 636-797-8425

STRUCTURAL:
RON ROMACKER
rsquareromacker@gmail.com
ph: 636-667-7937

FAMILY PARTNERS MANCHESTER
351-377 FOREST SUMMIT COURT
MANCHESTER, MISSOURI 63021

BID PACKAGE	02/12/20
2 CODE COORD. REVIEW	4/28/20
3 COUNTY PLAN REVIEW	5/19/20

PROJECT NUMBER:
18036.00

GENERAL NOTES AND STANDARD DETAILS

S1.0

7/1/2020 12:42 PM

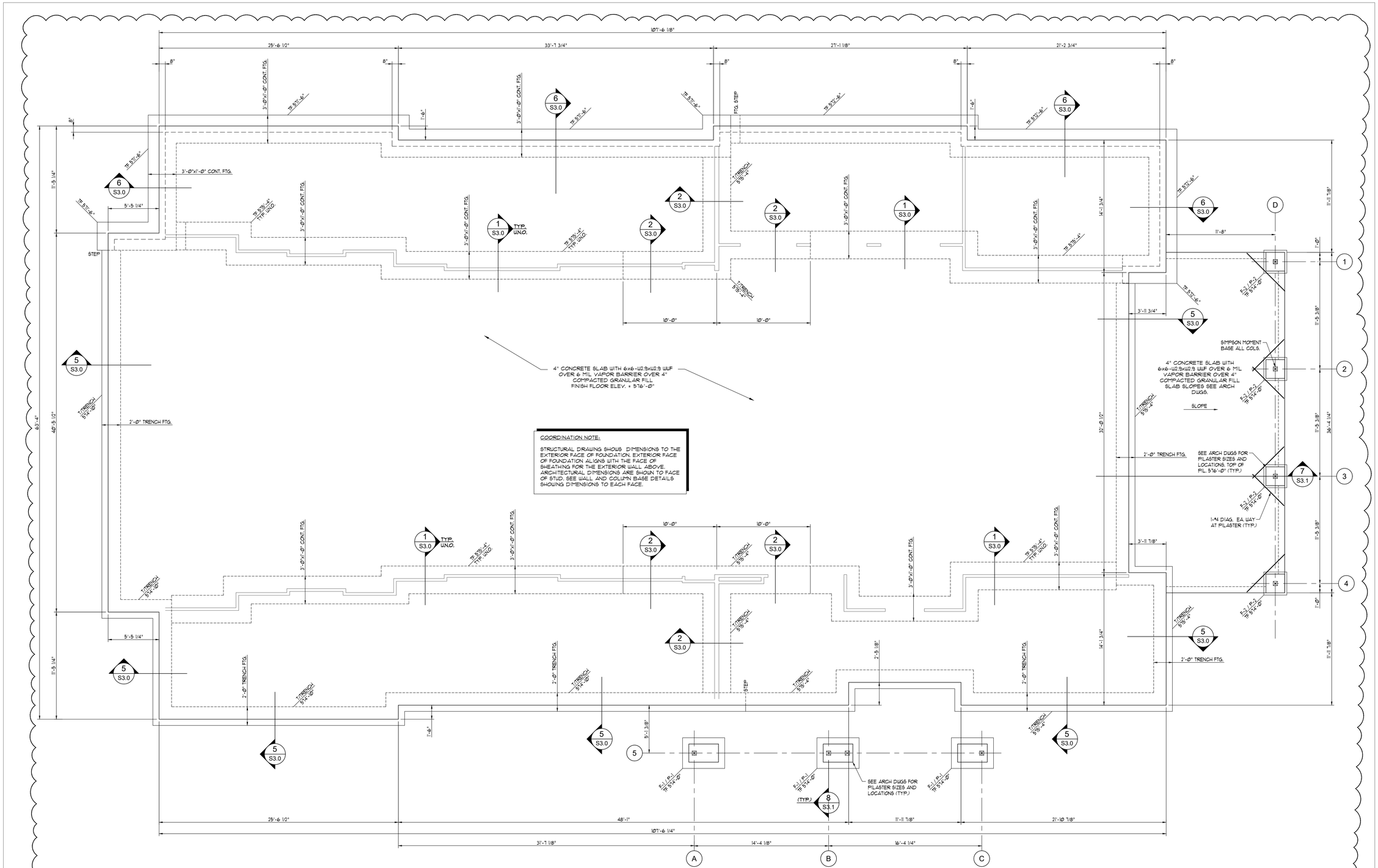

COORDINATION NOTE:

STRUCTURAL DRAWING SHOWS DIMENSIONS TO THE EXTERIOR FACE OF FOUNDATION. EXTERIOR FACE OF FOUNDATION ALIGNS WITH THE FACE OF SHEATHING FOR THE EXTERIOR WALL ABOVE. ARCHITECTURAL DIMENSIONS ARE SHOWN TO FACE OF STUD. SEE WALL AND COLUMN BASE DETAILS SHOWING DIMENSIONS TO EACH FACE.

FOOTING SCHEDULE

MARK	FOOTING SIZE	BOTTOM REINFORCING EACH WAY - U.N.O.
F-1	4'-0"x5'-0"x1'-0"	5 @ 12" O.C.
F-2	3'-0"x3'-0"x1'-0"	5 - 5

PILASTER SCHEDULE

MARK	FOOTING SIZE	REINFORCING U.N.O.
P-1	SEE ARCH	SEE S3.0
P-2	2'-0"x2'-0"	

FOUNDATION AND SLAB ON GRADE PLAN

1/4" = 1'-0"

PLAN NOTES:

1. SEE SHEET S1.0 FOR STRUCTURAL GENERAL NOTES AND STANDARD DETAILS.
2. TOP OF FOOTING (T.F.) ELEVATION IS NOTED ON THE PLAN.
3. "F-#" DENOTES COLUMN FOOTING DESIGNATION. SEE FOOTING SCHEDULE THIS SHEET.
4. "P-#" DENOTES CONCRETE PILASTER TYPE. SEE PILASTER SCHEDULE THIS SHEET.
5. "C.J." DENOTES SLAB CONSTRUCTION/CONTROL JOINT. SEE DETAILS ON S3.0.
6. UNLESS NOTED OTHERWISE, ALL SLABS ON GRADE TO BE 4" THICK CONCRETE SLAB ON 4" COMPACTED GRANULAR FILL OVER 6 MIL VAPOR BARRIER. REINFORCE SLABS WITH 6x6-W2.9xW2.9 W.W.F. SEE PLANS FOR FINISH SLAB ELEVATIONS.
7. SEE SHEET S2.1 FOR SHEAR WALL LOCATIONS.
8. COORDINATE AND VERIFY ALL DIMENSIONS WITH ARCHITECT'S DRAWINGS PRIOR TO COMMENCING CONSTRUCTION.

3

The Professional Engineer's seal affixed to this sheet indicates that the named Engineer has prepared or directed the preparation of the material shown only on this sheet. Other drawings and documents not exhibiting this seal shall not be considered prepared by or the responsibility of the undersigned.

ARCHITECT:
ZWICK + GANDT
ARCHITECTURE, INC
info@zgarch-st.com
ph: 314-962-9292

CIVIL:
VONARX ENGINEERING
dvonarx@vonarxengineering.com
ph: 636-797-8425

STRUCTURAL:
RON ROMACKER
rsquareromacker@gmail.com
ph: 636-667-7937

FAMILY PARTNERS MANCHESTER
351-377 FOREST SUMMIT COURT
MANCHESTER, MISSOURI 63021

BID PACKAGE		02/12/20
3	COUNTY PLAN REVIEW	5/19/20

PROJECT NUMBER:
18036.00

FOUNDATION AND SLAB ON GRADE PLAN

S2.0

7/1/2020 12:42 PM

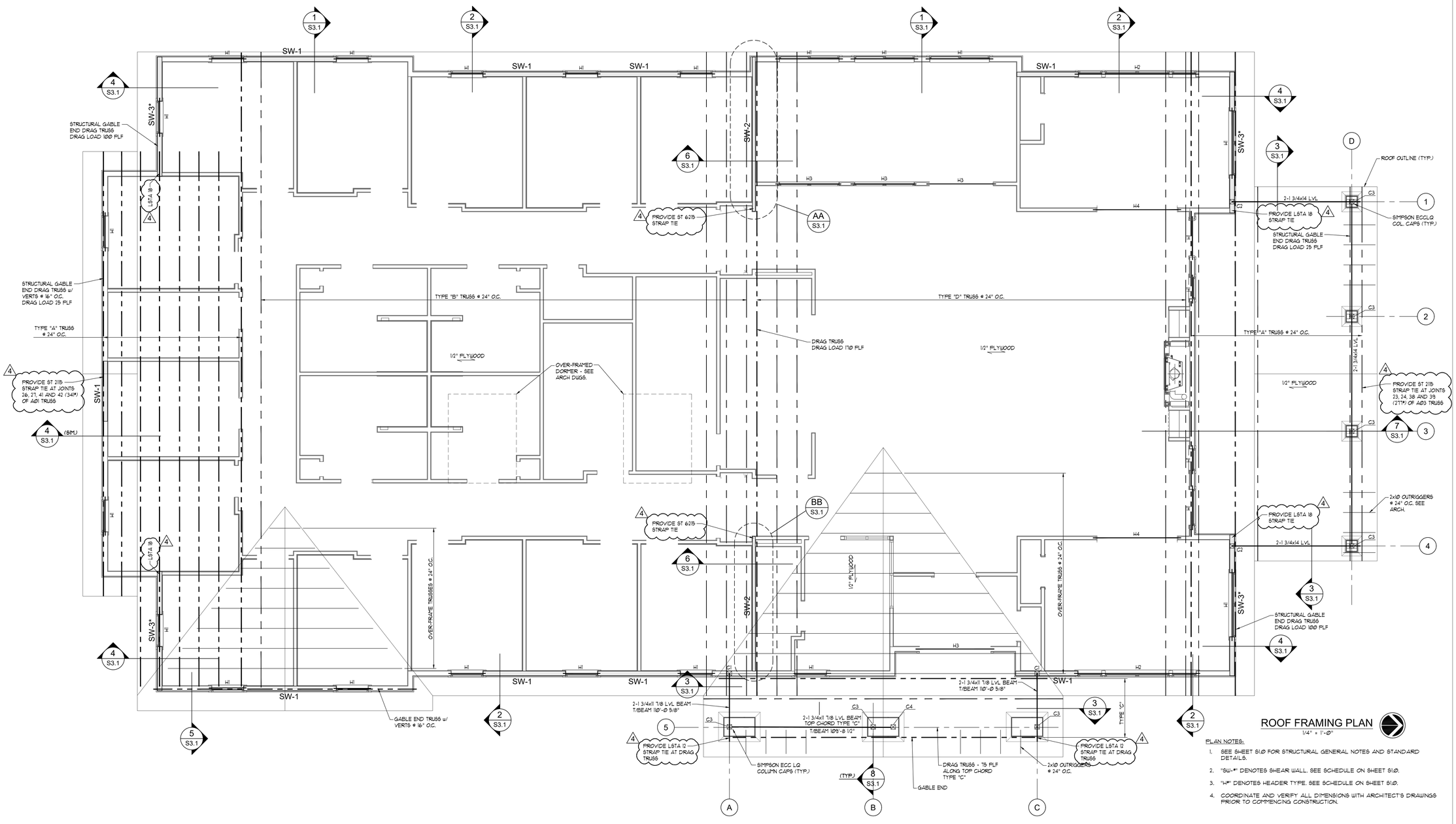

ROOF FRAMING PLAN

1/4" = 1'-0"

PLAN NOTES:

1. SEE SHEET S1.0 FOR STRUCTURAL GENERAL NOTES AND STANDARD DETAILS.
2. "SW-#" DENOTES SHEAR WALL. SEE SCHEDULE ON SHEET S1.0.
3. "H#" DENOTES HEADER TYPE. SEE SCHEDULE ON SHEET S1.0.
4. COORDINATE AND VERIFY ALL DIMENSIONS WITH ARCHITECT'S DRAWINGS PRIOR TO COMMENCING CONSTRUCTION.

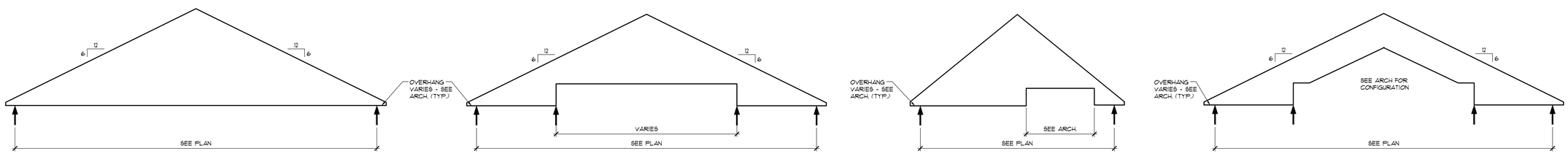

TRUSS TYPE "A" | TRUSS TYPE "B" | TRUSS TYPE "C" | TRUSS TYPE "D"

ROOF TRUSS TYPES

1/8" = 1'-0"

The Professional Engineer's seal affixed to this sheet indicates that the named Engineer has prepared or directed the preparation of the material shown only on this sheet. Other drawings and documents not exhibiting this seal shall not be considered prepared by or the responsibility of the undersigned.

ARCHITECT:
ZWICK + GANDT ARCHITECTURE, INC
info@zgarch-st.com
ph: 314-962-9292

CIVIL:
VONARX ENGINEERING
dvonarx@vonarxengineering.com
ph: 636-797-8425

STRUCTURAL:
RON ROMACKER
rsquareromacker@gmail.com
ph: 636-667-7937

FAMILY PARTNERS MANCHESTER

351-377 FOREST SUMMIT COURT
MANCHESTER, MISSOURI 63021

BID PACKAGE	02/12/20
2 COUNTY PLAN REVIEW	5/19/20
4 ADDED ROOF TRUSS TIES	6/17/20

PROJECT NUMBER:
18036.00

ROOF FRAMING PLAN AND ROOF TRUSS TYPES

S2.1

7/1/2020 12:43 PM

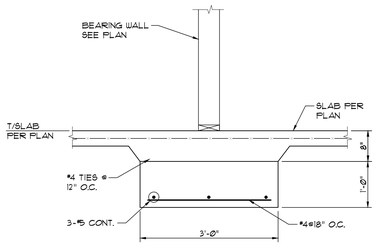

SECTION 1
3/4"=1'-0" 52.0

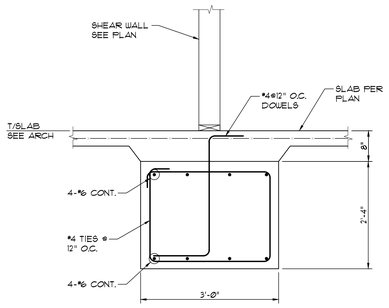

SECTION 2
3/4"=1'-0" 52.0

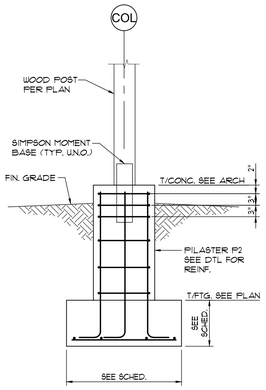

SECTION 3
3/4"=1'-0" 52.0

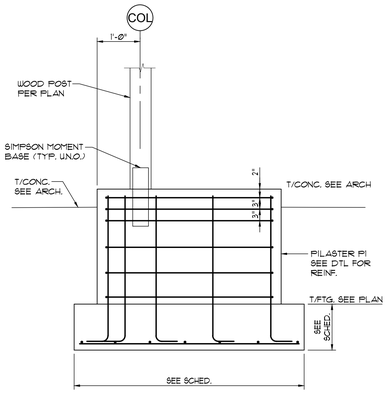

SECTION 4
3/4"=1'-0" 52.0

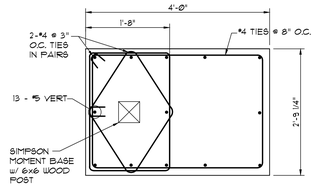

PILASTER P1 DETAIL
3/4"=1'-0" 52.0

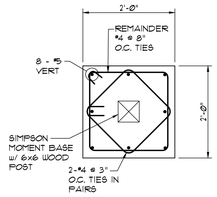

PILASTER P2 DETAIL
3/4"=1'-0" 52.0

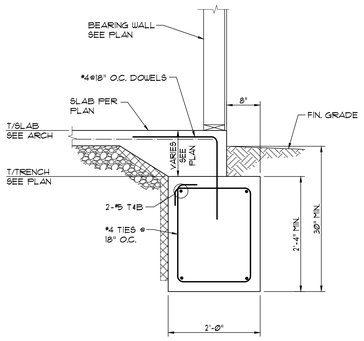

SECTION 5
3/4"=1'-0" 52.0

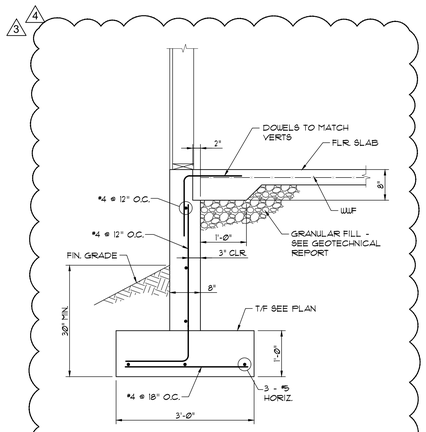

SECTION 6
3/4"=1'-0" 52.0

The Professional Engineer's seal affixed to this sheet indicates that the named Engineer has prepared or directed the preparation of the material shown only on this sheet. Other drawings and documents not exhibiting this seal shall not be considered prepared by or the responsibility of the undersigned.

ARCHITECT:
ZWICK + GANDT
ARCHITECTURE, INC
info@zgarch-st.com
ph: 314-962-9292

CIVIL:
VONARX ENGINEERING
dvonarx@vonarxengineering.com
ph: 636-797-8425

STRUCTURAL:
RON ROMACKER
rsquareromacker@gmail.com
ph: 636-667-7937

FAMILY PARTNERS MANCHESTER
351-377 FOREST SUMMIT COURT
MANCHESTER, MISSOURI 63021

BID PACKAGE	02/12/20
2 COUNTY PLAN REVIEW	5/19/20
4 ARCH. COORDINATION	6/17/20

PROJECT NUMBER:
18036.00

SECTIONS AND DETAILS

S3.0

7/1/2020 12:43 PM

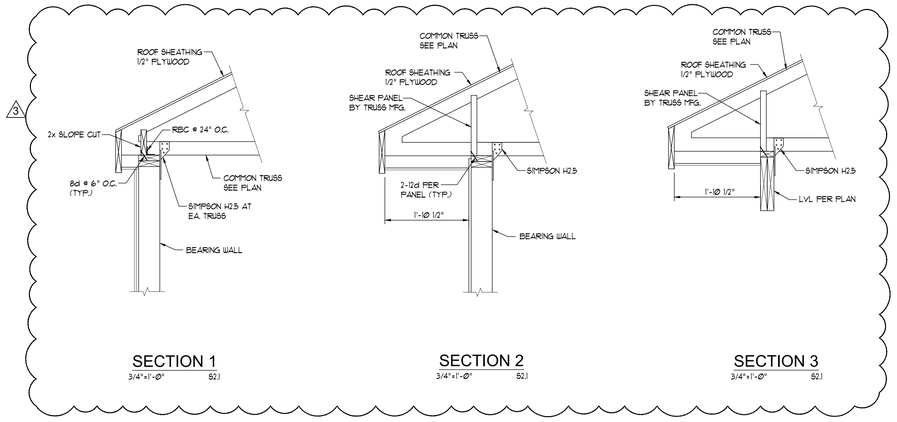

SECTION 1
3/4"=1'-0" S2.1

SECTION 2
3/4"=1'-0" S2.1

SECTION 3
3/4"=1'-0" S2.1

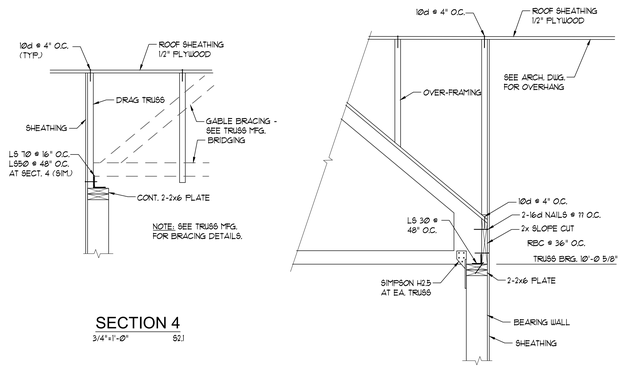

SECTION 4
3/4"=1'-0" S2.1

SECTION 5
3/4"=1'-0" S2.1

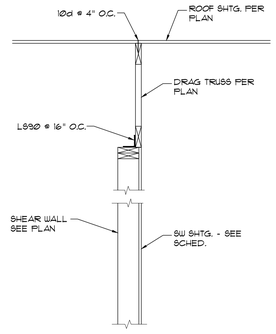

SECTION 6
3/4"=1'-0" S2.1

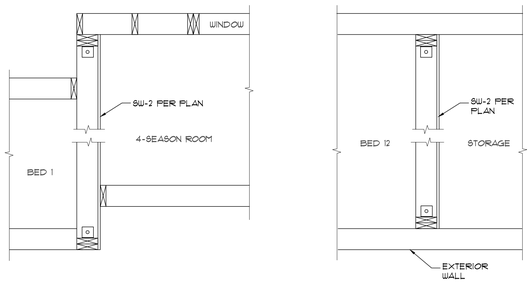

DETAIL AA
3/4"=1'-0"

DETAIL BB
3/4"=1'-0"

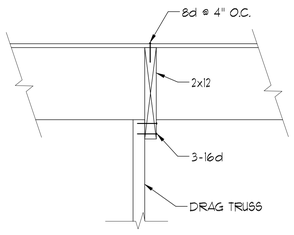

DETAIL 1
1"=1'-0" S3.1

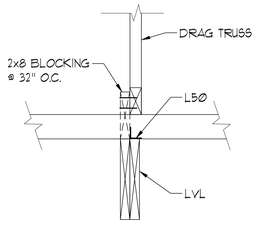

DETAIL 2
1"=1'-0" S3.1

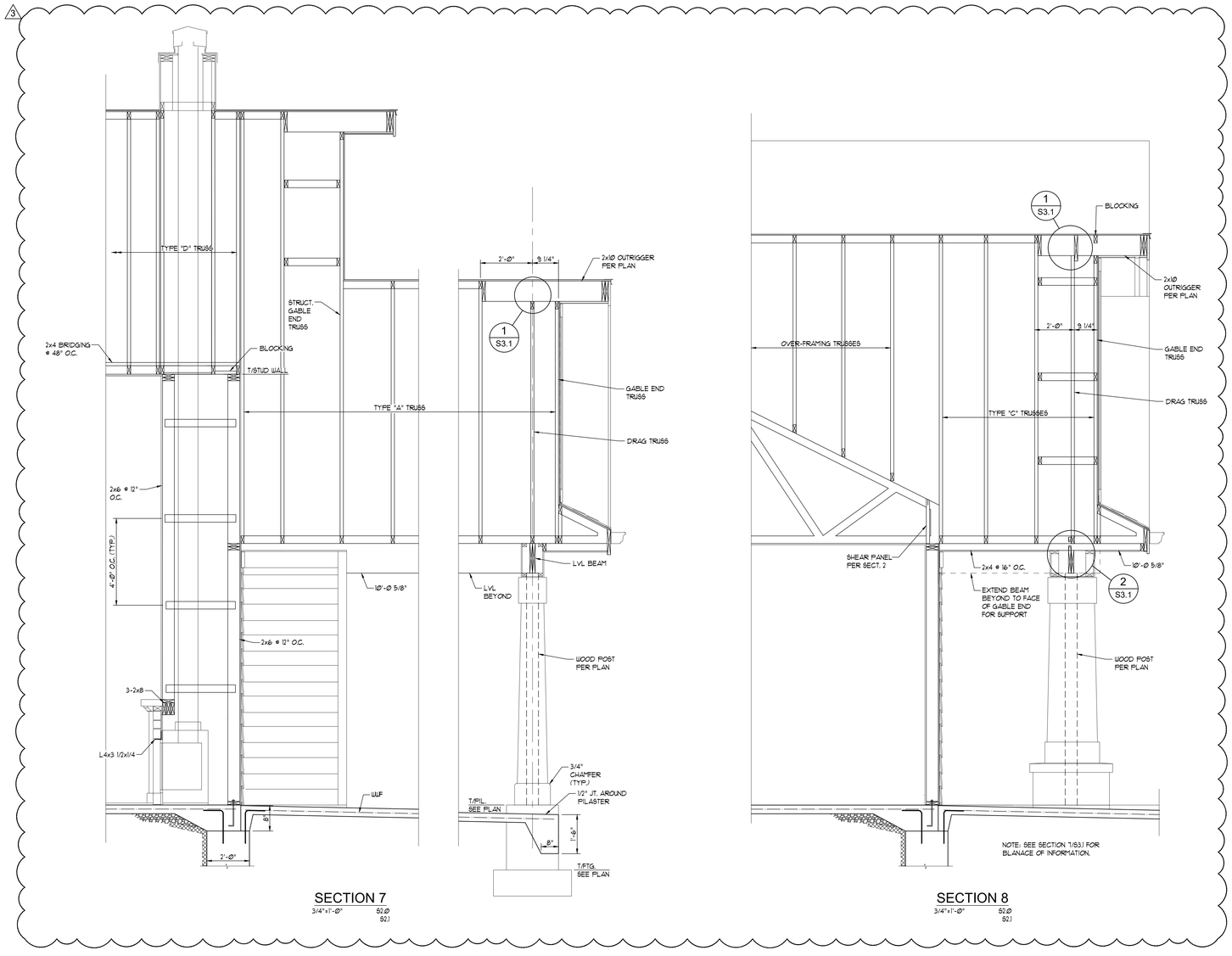

SECTION 7
3/4"=1'-0" S2.0 S2.1

SECTION 8
3/4"=1'-0" S2.0 S2.1

The Professional Engineer's seal affixed to this sheet indicates that the named Engineer has prepared or directed the preparation of the material shown only on this sheet. Other drawings and documents not exhibiting this seal shall not be considered prepared by or the responsibility of the undersigned.

ARCHITECT:
ZWICK + GANDT ARCHITECTURE, INC
info@zgarch-st3.com
ph: 314-962-9292

CIVIL:
VONARX ENGINEERING
dvonarx@vonarxengineering.com
ph: 636-797-8425

STRUCTURAL:
RON ROMACKER
rsquareromacker@gmail.com
ph: 636-667-7937

FAMILY PARTNERS MANCHESTER
351-377 FOREST SUMMIT COURT
MANCHESTER, MISSOURI 63021

2	BID PACKAGE	02/12/20
3	COUNTY PLAN REVIEW	5/19/20

PROJECT NUMBER:
18036.00

SECTIONS AND DETAILS

S3.1

7/1/2020 12:43 PM